YORU ALABASTER PENDANT

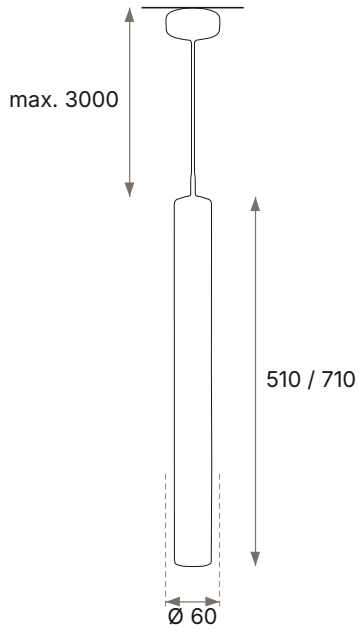

FEATURES

BRAND:	Kaito & Co
TITLE:	Yoru Alabaster Pendant Light
ARTICLE NUMBER:	KC-PND-YORU-40 / -60
TYPE:	Ceiling pendant
MATERIAL:	Natural alabaster column, dark bronze base
SIZES:	400mm or 600mm alabaster (510 / 710mm overall)
PRODUCT DIMENSIONS:	Ø 60mm
SUSPENSION:	Adjustable cable, max. 3000mm
LIGHT SOURCE:	Integrated LED, 3000K warm white, small downlight in base
CERTIFICATION:	CE
INSTALLATION:	Hardwired, by a qualified electrician
NOTE:	Natural stone: veining and tone vary piece to piece
WARRANTY:	2 years

TEL: +44 7507 977766 | EMAIL: INFO@KAITOANDCO.CO.UK | WWW.KAITOANDCO.CO.UK

THE INFORMATION ON THIS SPECIFICATION DOCUMENT WAS CORRECT AT THE DATE OF ISSUE. SOME VARIATION MAY OCCUR DUE TO MANUFACTURING TOLERANCES AND SITE-SPECIFIC CONDITIONS. ALL DIMENSIONS IN MM, NOT TO SCALE.