SORA MARBLE CORDLESS TABLE LAMP

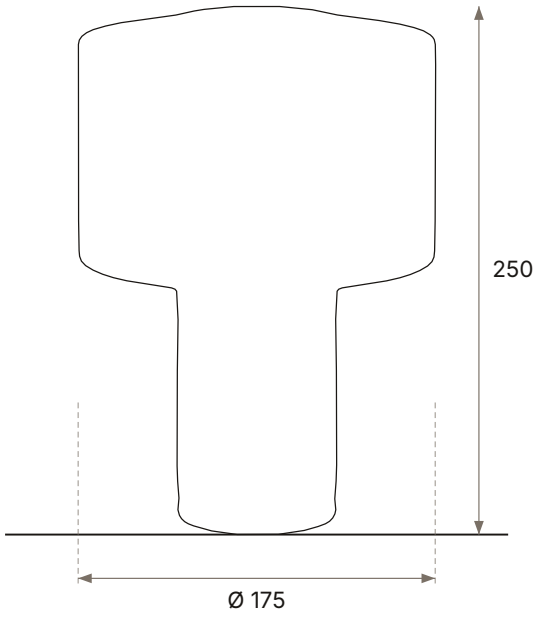

FEATURES

BRAND:	Kaito & Co
TITLE:	Sora Marble Cordless Table Lamp
ARTICLE NUMBER:	KC-TBL-SORA
TYPE:	Table lamp, cordless
MATERIAL:	Calacatta Viola marble base, fabric drum shade
PRODUCT DIMENSIONS:	H 250mm, shade Ø 175mm
LIGHT SOURCE:	Integrated LED, warm white
POWER:	Rechargeable battery, USB charging
CONTROL:	Touch, stepped dimming
CERTIFICATION:	CE
INSTALLATION:	Freestanding, cordless
WARRANTY:	2 years

THE INFORMATION ON THIS SPECIFICATION DOCUMENT WAS CORRECT AT THE DATE OF ISSUE. SOME VARIATION MAY OCCUR DUE TO MANUFACTURING TOLERANCES AND SITE-SPECIFIC CONDITIONS. ALL DIMENSIONS IN MM, NOT TO SCALE.